NPFSR-K4F31AMD

Input: 4-wire NO contact safety mat
Output: 3NO+1NC

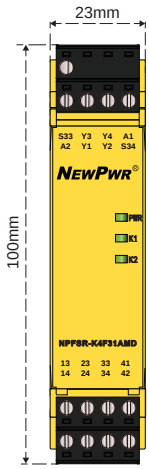
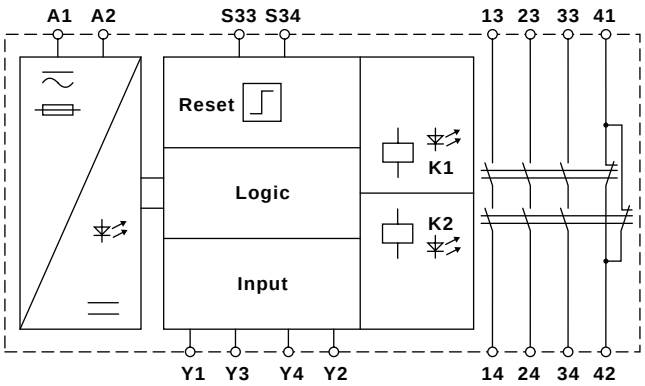
Functional Block Diagram